NOTE : KINDLY FOLLOW 3D DATA FOR UNSPECIFIED DIMENSIONS.

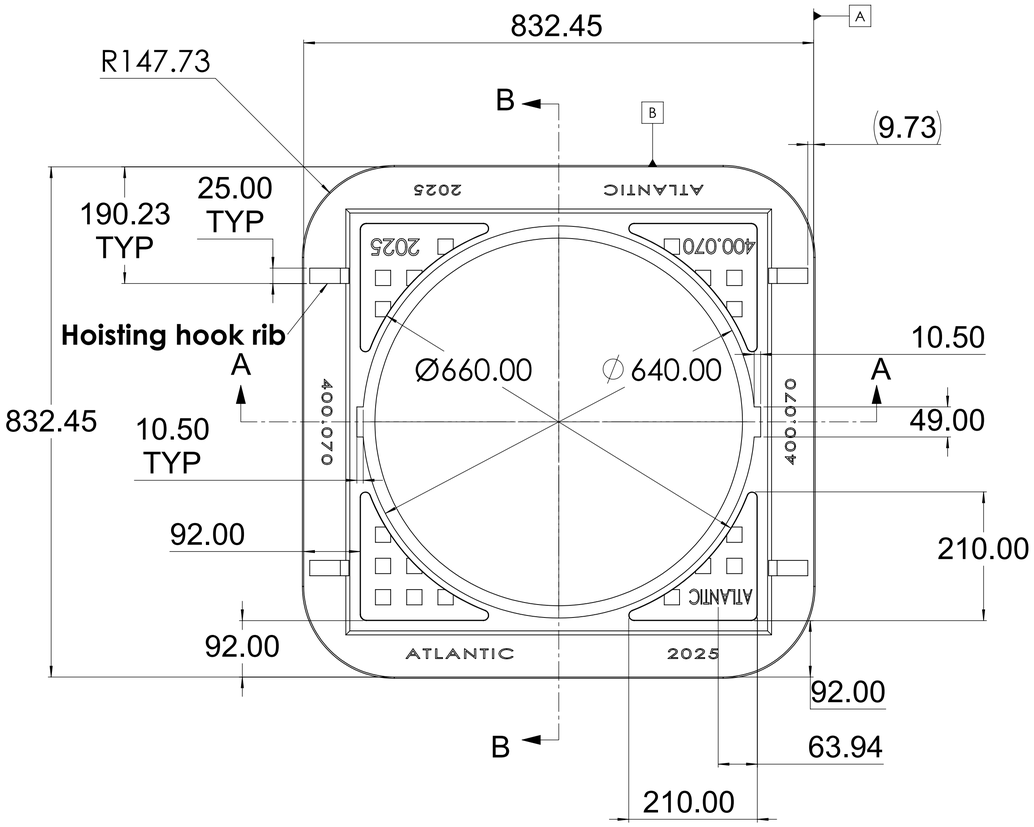

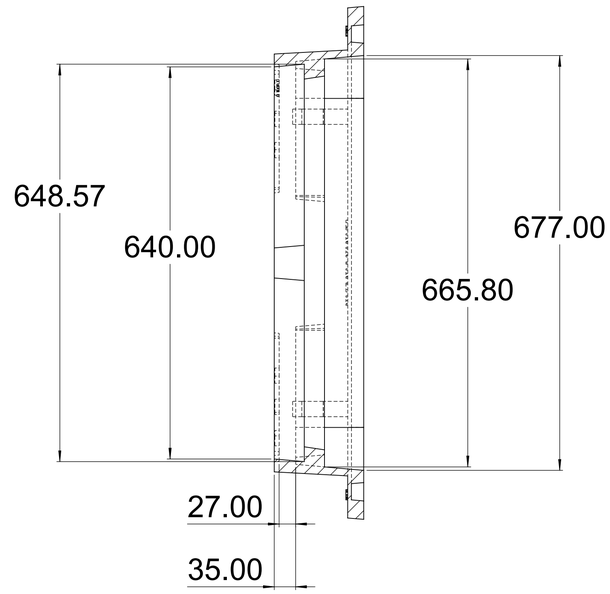

SECTION B-B

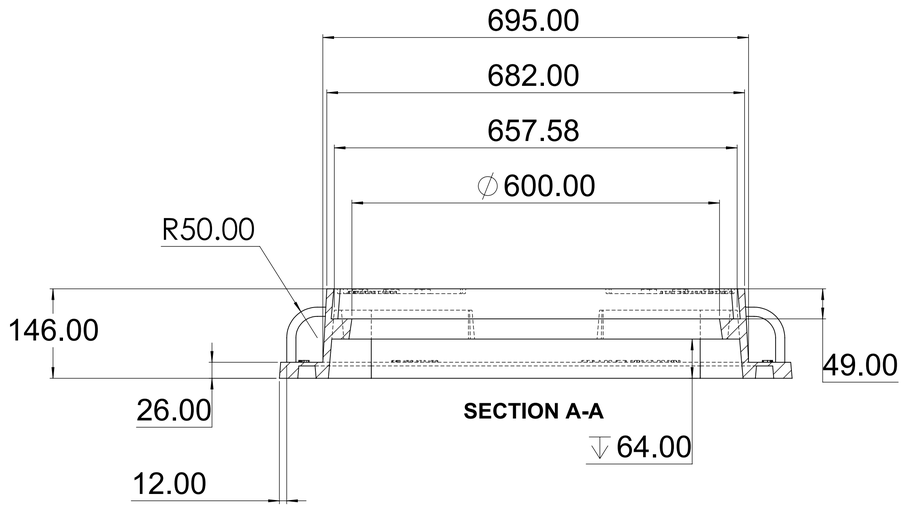

SECTION A-A

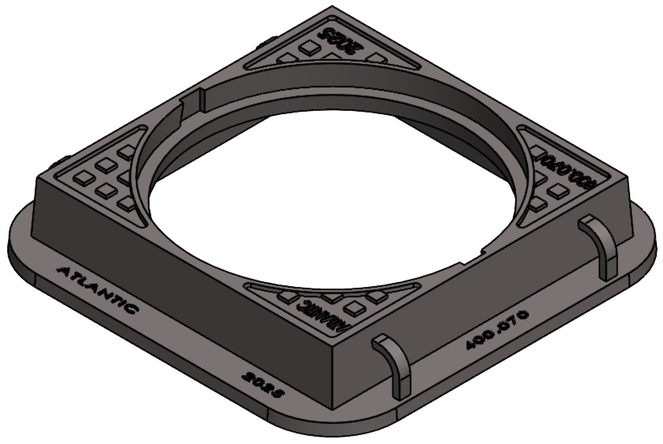

UNLESS OTHERWISE SPECIFIED: DIMENSIONS ARE IN MILLIMETERS TOLERANCES: LINEAR: ± 2 MM ANGULAR: ± 1° BRK/FILE SHARP CORNER: 1 MM MAX SURFACE FINISH: 20 - 50	THIS DRAWING IS THE PRIVATE PROPERTY OF "ATLANTIC " AND CAN NOT BE USED DIRECTLY OR INDIRECTLY WITHOUT THE WRITTEN PERMISSION OF THE COMPANY. ALL LEGAL RIGHTS RESERVED.				ATLANTIC	
	NAME	SIGNATURE	DATE	HEAT TREATMENT:	PART NAME:	REVISION:
DRAWN	ATLANTIC		16-09-2025		SQUARE FRAME	A
CHK'D				MATERIAL: ASTM-A48 CLASS-30B (CAST IRON)		
APPV'D						
MFG	-					
Q.A				PROJECT: 03	PART NUMBER: 400.070	
	DO NOT SCALE DRAWING		WEIGHT: 105.6 kg		SHEET 1 OF 1 / SCALE:1:5	SIZE: A1

REVISIONS

REV.	DATE	DESCRIPTION	EARLIER WAS	CHANGED TO
A	17-09-2025	DRAWWING RELEASED	INITIAL RELEASE	INITIAL RELEASE